INDOOR TANNING EQUIPMENT
CARE, USE AND INSTALLATION MANUAL

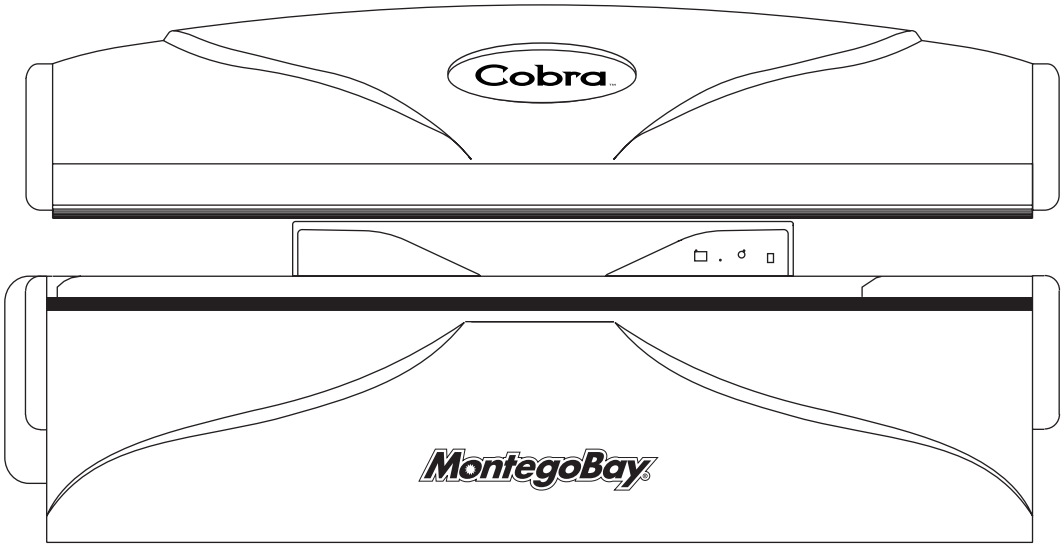

Montego Bay® Premium Tanning Equipment
Cobra™ Models: UX, UXF, EX, EXF, SX, SXF, HX, HXF

PC Marketing
1040 Wilt Avenue, Ridgefield, NJ 07657
1-800-FAST TAN (1-800-327-8826)
pcmarketinguwe.com

Copyright, 2004 – PC Marketing, Inc. – All Rights Reserved
Version 2.0

SECTION 1 - USER SAFETY INSTRUCTIONS

USER SAFETY INSTRUCTIONS 4

FOR YOUR CUSTOMERS: HOW TO USE THE UNIT 4

TANNING PROCESS EXPLAINED 5

SKIN TYPES 5

RECOMMENDED EXPOSURE SCHEDULE * 6

EXPOSURE WARNINGS 7

SECTION 2 - INSTALLATION INSTRUCTIONS

INSTALLATION INSTRUCTIONS FOR THE MONTEGO BAY COBRA UNITS 8, 9

TECHNICAL DATA AND DIMENSIONS* 10

SECTION 3 - T-MAX 004 TIMER INSTALLATION AND USER'S GUIDE

1 OVERVIEW 11

2 CONFIGURATION 11

2. Connecting to the Tanning Bed and Applying Power 11
2.1 Setting Parameters 11
2.1.1 Setting the Address 12
T-max Parameter Settings 13
2.1.2 Setting Delay Time 14

3 IN-ROOM SINGLE BED CONTROL 14

3.1 Starting A Session 14
3.2 Pausing A Session 14
3.3 Canceling A Session. 14

4 REMOTE SINGLE BED CONTROL 14

4.1 Wiring 14
4.2 Configuration 15
4.3 Session Control 15

5 USING THE T-MAX® 004 TIMER WITH A T-MAX® MANAGER OR T-MAX® MANAGER/PLUS 15

6 OTHER FEATURES 16

6.1 Clean Room 16
6.2 Lamp Hours 16
6.3 High Pressure (Single Side) Beds 16
6.4 Maximum Times 16
6.5 TPI (Third Party Input) Mode 16
6.5.1 Connecting the TPI Input 16
6.5.2 Connecting the TPI Output 17
6.5.3 Operation 17
6.5.4 Cool Down Mode 17
7. Figure B – T-Max® 004 Power Board 18
7.1 Figure C - Connecting the T-Max® 004 Timer to a Remote T-Max® 3A 19
7.2 Figure D - Connecting the T-Max® 004 Timer to A T-Max® Series 20

SECTION 4 - MAINTENANCE AND REPAIR

REPLACING ACRYLICS 21
ACRYLIC INSTALLATION AND REMOVAL 21, 22
RELAMPING INSTRUCTIONS 22
REPLACEMENT LAMP TYPES 22
LIGHTING THE LAMPS 22
REPLACING THE LAMPS 22

SECTION 5 - GENERAL SERVICE GUIDE

GENERAL SERVICE GUIDE… 23
A. WHAT YOU CAN DO WITHOUT A TECHNICAN… 23
B. WHEN IT'S TIME TO ASK FOR HELP… 24
GENUINE, FACTORY-AUTHORIZED REPLACEMENT PARTS 25
C. ELECTRICAL SCHEMATICS ..... STARTING PAGE 26

Section 1
User Safety Instructions

Always wear protective eyewear.
Failure to do so may result in severe burns or long-term injury to the eyes.

Local safety regulations and ALL safety instructions must be complied with before the unit is placed in operation

DANGER - ULTRAVIOLET RADIATION
Follow instructions. Avoid overexposure.

1. As with natural sunlight, overexposure can cause eye and skin injuries and allergic reactions.
2. Repeated exposure may cause premature aging of the skin and skin cancer.
3. Consult a physician before using sun lamps if you are using medication, or have a history of skin problems, or believe yourself especially sensitive to sunlight.
4. If you do not tan in the sun, you are unlikely to tan from the use of this product.

SAFETY INSTRUCTIONS

1. **Ultraviolet lighting is very intense. DO NOT look at the tanning lamps.**
2. **While tanning, close your eyes and always use the protective eyewear that is supplied.**
3. **DO NOT tan more frequently than once every two days.**
4. **Before tanning, always remove jewelry.**

FOR YOUR CUSTOMERS: How to use the Unit

Start of Tanning
(Left and right from front of unit)

1. Observe the recommended exposure chart.
2. Do not exceed tanning time recommended for your skin type.
3. Never tan if you already have been over exposed.
4. When tanning you must use protective eyewear.
5. Tanning session can be stopped at any time by means of the START/STOP switch on the operating panel.

TANNING PROCESS EXPLAINED

1. Melanin, the brownish pigment produced by special cells in the base layers of the skin, determines an individual's ability to tan.
2. As the skin is exposed to ultraviolet rays, this melanin is activated and combines with protein cells rising to the skin's surface, to produce a tan.
3. The amount of melanin in the body determines how quickly and darkly an individual can tan.
4. The tan produced by this unit is a deep, rich "cosmetic" tan.
5. ***No amount of tanning in this unit will provide adequate protection against overexposure to natural sunlight or UVB tanning systems.***

TANNING TIPS

1. No two individual skin tones are the same. A tan to one person may be different to another, and session length may vary.
2. Skin moisturizers designed for indoor tanning needs should be applied following every tanning session. *This promotes a smoother, more even looking tan.*
3. Facial make-ups with oil bases should be removed prior to each tanning session.
4. Creams, lotions, and oils designed for use outdoors contain sunscreens which form a physical barrier on the skin, keeping the UVA & UVB rays from penetrating. They thus inhibit the tanning process.
5. Only lotions, creams, and oils designed for use with indoor tanning equipment should be used with this unit

Failure to comply with recommendations and warnings stated above may void the manufacturer's warranty.

SKIN TYPES

SKIN TYPE II -This is the individual that usually burns easily and severely, tans minimally, or lightly, and peels.

SKIN TYPE III -Often referred to as "average" complexion, burns moderately but does tan.

SKIN TYPE IV -This individual burns minimally, tans easily and more than average with each exposure.

SKIN TYPE V -This individual rarely burns; tans easily.

RECOMMENDED EXPOSURE SCHEDULE FOR UX, UXF

Skin Type	**Week 1** Sessions 1-3	**Week 2** Sessions 4-6	**Week 3** Sessions 7-10	**Week 4** Sessions 11-15	**Weekly** Subsequent Sessions
II--Fair	3	5	9	15	15
III--Average	5	6	9	15	15
IV--Brown	5	8	11	15	15
V--Dark Brown	5	8	11	15	15

RECOMMENDED EXPOSURE SCHEDULE FOR EX, EXF

Skin Type	**Week 1** Sessions 1-3	**Week 2** Sessions 4-6	**Week 3** Sessions 7-10	**Week 4** Sessions 11-15	**Weekly** Subsequent Sessions
II--Fair	3	6	12	15	20
III--Average	4	8	12	15	20
IV--Brown	5	10	15	20	20
V--Dark Brown	6	12	15	20	20

RECOMMENDED EXPOSURE SCHEDULE FOR SX, SXF

Skin Type	**Week 1** Sessions 1-3	**Week 2** Sessions 4-6	**Week 3** Sessions 7-10	**Week 4** Sessions 11-15	**Weekly** Subsequent Sessions
II--Fair	3	5	9	15	15
III--Average	5	6	9	15	15
IV--Brown	5	8	11	15	15
V--Dark Brown	5	8	11	15	15

RECOMMENDED EXPOSURE SCHEDULE FOR HX, HXF

Skin Type	**Week 1** Sessions 1-3	**Week 2** Sessions 4-6	**Week 3** Sessions 7-10	**Week 4** Sessions 11-15	**Weekly** Subsequent Sessions
II--Fair	2	3	6	10	10
III--Average	3	4	6	10	10
IV--Brown	3	6	8	10	10
V--Dark Brown	3	6	8	10	10

*Our RECOMMENDED EXPOSURE SCHEDULE is enclosed with every unit we sell.

1. Tanning can begin on a regular basis.

2. An appearance of tanning normally occurs after a few exposures and maximizes after four (4) weeks of exposure following the recommended exposure schedule for your skin type.

3. For maintenance of a tan, a maximum of two (2) weekly sessions is recommended, based on your skin type, from the fifth week onward.

EXPOSURE WARNINGS

Photosensitivity
If you have been diagnosed by a physician as being allergic to the sun or are currently taking photosensitive medications, consult your physician before using any tanning equipment.

Drug-enhanced photosensitivity
Certain drugs, particularly those that enhance photosensitivity - may cause individuals under their influence to experience adverse effects. *Such individuals must avoid exposure to UV sources of all kinds. Doctors will advise persons taking these drugs of possible adverse effects.*

PROTECT YOUR VISION!

1. Tanning systems are designed for use by only one person at a time.
2. *ALWAYS USE PROTECTIVE EYEWEAR WHEN TANNING.*
3. Protective eyewear is provided with each unit sold.
4. Call PC Marketing or your authorized PC Marketing distributor for recommended eyewear.

Heat Rash
1. This redness is often accompanied by an itching sensation, and is nothing more then a heat "rash" caused by heat from the lamps within the system.
2. Occasionally, persons using the tanning system will experience a slight reddening of the skin - usually in small patches - after the second or third session
3. Heat rashes are generally very limited and caused by constant contact of the skin with the acrylic surface.
4. Heat rashes should fade within approximately 24 hours and should not reappear.

This rash can be lessened or prevented by applying moisturizing lotion to the affected area after the tanning session is complete.

WARNING: PREGNANCY

While there is no immediate clinical evidence regarding UVA and UVB exposure and its effects upon expectant mothers, pregnant women should be strongly advised against, and discouraged from, using tanning equipment.

Section 2
Installation Instructions for the Montego Bay Cobra Series

Do not run unit until completely assembled!

Installation Instructions for Montego Bay Cobra Series
--At least two persons required.

Do not attempt to assemble with power hooked to unit..
THIS WILL RESULT IN BODILY INJURY.

1- Remove banding from out side of carton.
2- Remove carton from skid with one person on each end of skid, by picking the carton straight up and over the unit. Place carton to the side of unit broken down flat.
3- Remove banding and foam from unit! Be careful not to scratch unit during this process.
4- Raise canopy to the up position with one person in front of unit and one person to the rear of unit.
5- Remove skirt from lounge acrylic and place to the side.
6- Locate pull pins in rear of unit on the pivot structure and remove both pins from each side while still holding the canopy in the upright position. Do not discard pins! You will need for later installation!
7- Move each person to the end of the canopy and position hands on outer rails and lift canopy straight up out of pivot arms.
8- After canopy is removed, place canopy on broken down carton to the side with the acrylic faced down.
9- Remove all three access panels from front of lounge using a Phillips head screwdriver. (One on each end and one in center of lounge.)
10- Locate nuts on bottom of the lounge through access panels. There is one nut on each side and remove using a ½" wrench.
11- Go around to back of unit and locate the 10 screws holding the lounge to the base and remove. (Three screws on left side, four screws in the middle and three screws on right side.)
12- Move each person to the end of the lounge and position hands on outer rails. Slide lounge forward and lift up using caution not pinch lounge cord hanging under unit. Place lounge with acrylic facing down next to canopy on broken down carton. DO NOT PLACE LOUNGE WITH ACRYLIC UP. This will cause damage to endcaps on each end of lounge.
13- Go to front of the base and unplug and remove all electrical trays and set to side.
14- Also remove the wire jumper and body fan housing located in the right section of the base.
15- Move around to back of the unit and remove the two brackets that hold the unit to the skid. Do not discard the two 5/16" bolts that were removed. You will need to replace later in installation.
16- Locate and unplug Tmax cord coming from back of dash panel to base.
17- Remove the rest of the bolts holding the pivot stand to base. (There will be five 5/16" bolts left on each side of pivot stand.) Do not lose bolts. They must be replaced later in installation!
18- Pull pivot stand away from base and set to the side.
19- Now you are ready to take base unit into room. (If needed you can remove the end sections from base by removing the four 5/16" bolts holding end sections to center section of base.)
20- Once base is into room you are ready to mount pivot stand back to rear of unit by setting the pivot stand in position and replacing all twelve bolts removed from base. Make sure all bolts are tight and secured to base.
21- Now locate the Tmax cord hanging from back of dash panel and plug back into the base marked as TOUCHPAD!

22- You are ready to install canopy back onto pivot stand. (Pins removed from pivot stand from step 6 now will be needed.)
23- Lift canopy by positioning hands on outer rails and mount to pivot stand by lining up square tubing on back of the canopy to the pivot arms located on pivot stand. Canopy must go onto pivot arms evenly to line up holes for the pins to be reinserted.
24- MAKE SURE PINS ARE REINSERTED THROUGH CANOPY BRACKET AND PIVOT ARMS IN THE HOLES! DAMAGE COULD OCURR AND THE POSSIBLITY OF INJURY IF THE PINS ARE NOT REINSERTED.
25- Locate wire jumper which was removed off of lounge in step 5. Once located attach one end to the back of the canopy and attach other to the back of the base. Make sure these ends are tightened and attached correctly.
26- You are now ready to bring the lounge into the room and install by placing lounge onto base and setting unit to farthest back position until lounge touches back panel. Align studs into allowed position to secure lounge. Go to back of unit and replace the ten screws removed from step 11 using a Phillips head screwdriver. Locate the two nuts removed in step 10 and replace onto studs and tighten using a ½" wrench.
27- Locate the body fan housing from step 14 and install onto left end of base. There will be a kit with bolts taped to the front of the body fan housing.
28- Now locate the electrical panels (5 panels for units without facials and 6 panels for units with facials.) It is time to install these electrical panels. Place the two lounge trays all the way to the right in the last two slots. Place the two canopy trays next to the lounge trays directly to the left of them in the two allowed slots. Locate and place the main board all the way to the left of the base in the allowed slot. On the units with facials, you must locate and place the facial board directly to the right of the main board.
29- You are ready to connect all the electrical panels in. Take the allowed plug and check the color code on the plug and connect it in the correct position. Do this for all the connectors and secure them into position.
30- Have a qualified electrician install the electrical service to the electrical enclosure; Make certain of proper voltage and phase needs for operation of your new Montego Bay Tanning equipment.
31- Once electric is ran to your unit you can replace the three front access panels on the front of the base.
32- Now locate and unwrap the front base skirt. Bring the skirt to the front of the unit and place it into position and screw the two screws provided into each side and place the black caps over them.

Technical Data and Dimensions*

Designation	MB-Cobra UX, EX, EXF, SX, SXF, HX, HXF
Operating Voltage	220VAC Single Phase 30 AMP
Weight	700 Lbs.
Height (overall)	44"
Length (overall)	90 ½"
Depth (overall)	42"
Breaker / Wire size needed	30 Amp / 10 gauge

*We reserve the right to make technical changes.

Designation	MB-Cobra UXF
Operating Voltage	220VAC Single Phase 40 AMP
Weight	700 Lbs.
Height (overall)	44"
Length (overall)	90 ½"
Depth (overall)	42"
Breaker / Wire size needed	40 Amp / 8 gauge

*We reserve the right to make technical changes"

Section 3
T-Max 004 Timer Installation And User's Guide

1 OVERVIEW

A T-Max® 004 Timer is an OEM board that can in installed in a tanning bed or tanning booth. Each T-Max® 004 Timer can individually control a tanning bed, can be connected back-to-back with a T-Max® 1A or T-Max® 3A for remote front desk control or be connected with many T-Max® 004 Timers and a T-Max® Manager or T-Max® Manager/Plus to control many beds from a remote location. Operation is accomplished via front panel controls.

This manual should be used by the licensed electrician installing your T-Max® timing system. Check for compliance with local and national building codes.

2 CONFIGURATION

2.1 Setting Parameters

Note: If you are using a T-Max® Manager or T-Max® Manager/Plus and multiple T-Max® 004 Timers, remove power from the T-Max® Manager or T-Max® Manager/Plus and keep the power removed until all parameter changes are complete.

1) Press and hold the Start/Stop and the Up buttons simultaneously on the T-Max® 004 Timer. As soon as you see a ".1" on the display, release the buttons. This should take about 5-6 seconds.

   This is an indication that you are in the parameter mode. The numbers currently displayed represents the parameter number that you can observe or change.

2) Press the Up and Down Buttons until the parameter number that you want to observe or change is displayed.

3) Press the Start/Stop Button. The current value for that parameter will be displayed and flashing. The T-Max® 004 Timer will show a number with a period illuminated in the lower center of the display. The flashing number shown is the current value for that parameter.

   For Lamp, Session Counts, etc. the value displayed can be as high as 9999. To display this value, the T-Max® 004 Timer will flash two numbers-three times, then two numbers-three times, pause, two numbers-three times, two numbers-three times, pause, etc. For example, if you are checking lamp hours (Parameter 6) and the display flashes the numbers 53 three times, then 14 three times, pauses then repeats, then the total lamp hours stored in that T-Max® 004 Timer is 5314.

4) Press the Up and Down buttons to change the parameter to the desired value.

   If you want to clear the value for that parameter, press the Up and Down buttons at the same time until the display shows 0.0.

5) Press the Start/Stop Button.

   The display will show the parameter number you just changed and a solid period in the lower center of the display. You may now change another parameter by pressing the Up and Down buttons until the parameter that you want to change is displayed. Repeat Steps 2-4 for each parameter you want to change.

6) To exit the Parameter mode and make the T-Max® 004 Timer available for the next session, press and hold the both up and down buttons until the display shows a 0 with no periods displayed.

2.1.1 Setting the Address

Note: If you are using the T-Max® 004 Timer as an independent timer, you don't need to set the address on the T-Max® 004 Timer.

1) Press and hold the Start/Stop and Up buttons simultaneously on the T-Max® 004 Timer until a .1 appears on the display. Release the buttons. This should take about 5-6 seconds.
2) Press and release the Start/Stop button. A number will appear on the display and be flashing. A period will be illuminated in the center of the display.

   Pressing and holding the Up button will cause the display to count up. Once the counter/display reaches 100, the center period will flash rapidly. This is an indication that you are over 99. For example, if the display shows a 0.2 with the period flashing, this is address 102. The highest the display will read 254.
3) Press the Up and Down buttons until the desired address is displayed. When setting the address, remember 3 rules:

   A) Set each T-Max® 004 Timer to a unique address. B) Do not set any address to 0. C) Do not set any address over 100.
4) Press the Start/Stop button. The ".1" will appear on the display. The 1 will not be flashing.
5) To exit, press and hold both the Up and Down buttons until the display shows a 0 with no periods displayed.

Table 1 - Parameter numbers for observing and changing parameters.

Param. #	Description	Max #	Default	Notes
Salon Level				
1	Address	255	254	Address of T-Max®3A/F/I
2	Beep Mode	1	0	Used for High Power beds. 0=Alarm only, 1=Alarm and Flip
3	Delay Time	5	0	Delay in minutes stored in the T-Max®3A/F/I.
4	Current Sense	1	0	For the T-Max® Sentry™ Option. 0=Disabled, 1=Enabled.
5	Session Counts	65535	0	Total session counts for T-Max®3A/F/Is.
6	Lamp Hours	65535	0	Lamp hours for each bed.
7	Bed Hours	65535	0	Number of hours a bed is on.
8	Manual Session Counts	65535	0	Counts the number of sessions the T-Max®3A/F/I has run while in Stand Alone Mode
9	Clean Room	1	1	0 = Clean Room Disabled, 1 = Enabled
10*	Manual Lockout	1	0	0 = Stand Alone Enabled, 1 = Disabled
13	Cool Down Mode	10	0	0 = Disabled, 1-10=Enabled. Time delay in minutes allowing bed to cool.
15	Fixed Session Counts	65535	0	Counts number of sessions ran through the T-Max®3A/F/I. This value cannot be changed at all. Used as point of reference.
17	Clean Clear	1	0	0 = Press and hold the Up button for 3-4 seconds to clear the clean room. 1 = Press and release the Up button to clear instantly
19*	Third Part Interface (TPI) Mode.	1	0	When set to a 1, voltage must be applied be an outside source to the TPI input on the back of the T-Max® 004 Timer. Used is the timer is being controlled by either a FST® or Database® Series Timer. See Section 6.5 for JP1 settings.
20	External Speaker	1	0	0 = Speaker on T-Max®3A/F/I, 1 = External Speaker will be used.
21	Pause Mode	1	0	0 = When session is paused, session time continues to count down. 1 = When session is paused, session time stops counting down.
22	Auto Shut Off	1	0	0 = When intercom is active, the bed will stay on. 1 = When intercom is active, bed will turn off and go to pause mode
Manufacture's Level				
35	After Lamp Fan Delay	255	3	Time in seconds that the fans in the bed will delay coming on after the lamps have turned on. 0=disabled.
51	Fractional Lamp Hours	59	0	Minute counts used by lamp hour counter.
52	Fractional Bed Hours	59	0	Minute counts used by bed hour counter.
53	Session Limit.	65535	9999	9999=disabled. Used in conjunction with parameter 55 for profit sharing. Once this parameter's limit is set, when parameter 55's value exceeds this parameter setting by 1, the bed will be disabled and an L4 will appear on the display.
54	Hour Limit.	65535	9999	9999=disabled. Used in conjunction with parameter 61 for profit sharing. Once this parameter's limit is set, when parameter 61's value exceeds this parameter setting by 1, the bed will be disabled and an L4 will appear on the display.
55	Secrete Session Counts.	0	0	Used in conjunction with parameter 53 for profit sharing. Once parameter 53's limit is set, when this parameter value exceeds parameter 49 setting by 1, the bed will be disabled and an L4 will appear on the display.
61	Secrete Hour Counts.	0	0	Used in conjunction with parameter 54 for profit sharing. Once parameter 54's limit is set, when this parameter value exceeds parameter 49 setting by 1, the bed will be disabled and an L4 will appear on the display.

* In this mode, the T-Max® 004 Timer cannot operate as a stand-alone timer.

2.1.2 Setting Delay time.

If the T-Max® 004 Timer is being controlled by a T-Max® 1A, T-Max® 3A, T-Max® Manager or T-Max® Manager/Plus, the delay does not need to be set on the T-Max® 004 Timer. The controlling device controls the delay.

1) Press and hold the Start/Stop and Up buttons simultaneously on the T-Max® 004 Timer until a ".1" appears on the display. Release the buttons. This should take about 5-6 seconds.
2) Press the Up and Down Button until a ".3" is displayed (Parameter 3 ids for delay. See Table 1).
3) Press and release the Start/Stop button.

   A number will appear on the display and be flashing. A period will be illuminated in the center of the display. This is the current delay time.
4) Press the Up and Down Button until the desired delay time is displayed.

   The highest delay time that can be set on the T-Max® 004 Timer is 10 minutes. If you want no delay time, set the display to 0. If you set the Delay Time to 0, the session time will start immediately after the Start/Stop button is pressed.
5) Press the Start/Stop button. The ".3" will appear on the display. The 3 will not be flashing.
6) To exit, press and hold both the Up and Down buttons until the display shows a "0" with no periods displayed.

3 IN-ROOM SINGLE BED CONTROL

3.1 Starting A Session

1) Press the Up and Down Button on the T-Max® 004 Timer until the desired session time is displayed. If the display shows a 0 and you want to count down from the maximum time press the down button.
2) Press and release the Start/Stop button to start the session.

   If a delay other than 0 is entered the delay will count down. A period on the lower right corner of the display will flash rapidly. When the session starts the period will flash at a once per second rate. If the delay is set to 0 the session will start immediately.

3.2 Pausing A Session

Press the Start/Stop button to pause the session. The flashing period on the lower right corner of the display will stop flashing and stay illuminated. To restart the session, press the Start/Stop button on the T-Max® 004 Timer. The period on the lower right corner of the display will resume flashing.

Note: The session time will continue to count down. The display will continue to update and reflect the remaining session time.

3.3 Canceling A Session.

Press the Start/Stop button to pause the session, then press the Up button. This will cancel the session. The display will show a solitary 0.

4 REMOTE SINGLE BED CONTROL

Remote Single Bed Control is the ability to control a single tanning bed from a remote location. A T-Max® 1A or T-Max 3A is required at the remote location for this configuration.

4.1 Wiring

Wire the T-Max® 004 Timer to the tanning bed as described in Section 2.1. Apply power to the T-Max® 3A as described in their respective User's Guides.

Run the provided modular cable from the tanning room to the remote T-Max® 3A or T-Max® 1A. Connect the modular cable to one of the RJ-22 ports on the T-Max® 004 Timer and T-Max® 1A or T-Max 3A (it does not matter which port the cable is connected to).

4.2 Configuration

Set the address on the T-Max® 004 Timer in the tanning room to 1as described in Section 2.2.2. Set the address on the T-Max® 3A to 0.0 as described in the T-Max® 3A user's guide. For setting the delay refer to the T-Max® 3A User's guide.

Note: When setting the address on the T-Max® 004 Timer in the tanning room, the power to the front desk T-Max® 1A or 3A must be off.

4.3 Session Control

Starting a session

1) Press the Up and Down Button on the T-Max®3A or the Set button on the T-Max® 1A at the front desk until the session time is displayed. Time cannot be set from the T-Max® 004 Timer in the room.

2) Press the Start/Stop button on the front desk T-Max®1A or T-Max® 3A to start the session.

   If a delay other than 0 is set, the delay will count down. A period on the lower right corner of the display will flash rapidly. When the session starts, the period will flash at once per second rate. If a 0 delay entered, the session will start immediately.

Pausing During the Session

To pause the session, press the Start/Stop button on the T-Max® 004 Timer in the tanning room. The flashing period on the lower right corner of the display will stop flashing and stay illuminated. To restart the session, press the Start/Stop button on the T-Max® 004 Timer in the tanning room. The period will continue flashing.

Note: The session time will continue to count down. The display will continue to update and reflect the remaining session time.

Canceling a Session

To cancel a session, press both the Start/Stop and Up button on the T-Max® 3A at the front desk simultaneously. If you are using a T-Max® 1A, press the Start/Stop and Set buttons simultaneously. The session cannot be canceled from the T-Max® 004 Timer.

5 USING THE T-Max® 004 Timer WITH A T-Max® MANAGER OR T-Max® MANAGER/PLUS

If you are using T-Max® 004 Timers with a T-Max® Manager or T-Max® Manager/Plus, follow these instructions for proper operation:

1) Set the address on each T-Max® 004 Timer as described in section 2.2.1.

   Note: If this is a first time installation, go through the quick installation procedure in Section 2 of the T-Max® Manager or T-Max® Manage/Plus User's guides. This will automatically set the address on the T-Max® 004 Timers and you will not need to set the addresses manually as described in the following steps. If you need to set the address on the T-Max® 004 Timer manually, be sure to set each T-Max® 004 Timer to a different address. No T-Max® 004 Timer should be set to address 00.

2) Connect each T-Max® 004 Timer together using a modular cable that conforms to the pin outs shown on Figure D. Connect T-Max® Manager or T-Max® Manager/Plus to the closest T-Max® 004 Timer in the line (Refer to Figure D).

   Note: Delay is controlled by the T-Max® Manager, the T-Max® Manager/Plus or the software you are using if you are using a computer. It is not necessary to set the delay on the T-Max® 004 Timer. Refer to the T-Max® Manager or T-Max® Manager/Plus User's Guide for operation.

6 OTHER FEATURES

6.1 Clean Room

Once the session time has elapsed, the display will show two solid periods only. This is an indication that the room needs to be cleaned. To clear the clean room indication, press and hold the Up button on the T-Max® 004 Timer in the tanning room until the two periods disappear and a “0” appears. To disable the clean room feature, set parameter 9 to a 0. (Refer to Section 2.2)

6.2 Lamp Hours

To check and change Lamp Hours (or any other parameter), refer to Section 2.2.

6.3 High Pressure (Single Side) Beds

With this option, the T-Max® 004 Timer in the tanning room will sound an alarm half way through the tanning session. This is an indication that the person tanning needs to turn over. Refer to Section 2 on how to change parameters.

Parameter 2 enables or disables the Mid-Session Flip alarm.

0 = Beep mode Disabled

1 = Beep Mode Enabled. The T-Max® 004 Timer will beep for 10 seconds half way through the active session.

6.4 Maximum Times

Maximum times are programmed into the T-Max® 004 Timers at the factory. Setting a parameter cannot change the maximum times.

6.5 TPI (Third Party Input) Mode

If you are using a FST® or Database® Series timers, you will need to place the T-Max® 004 Timer in the TPI mode.

6.5.1 Connecting the TPI Input

1. Set Parameter 19 to a 1 (Refer to Section 2.2)
2. Connect the two actuator wires from the FST® or Database® timer to the TPI input in the back of the T-Max® 004 Timer (refer to Figure B).

   When a session is started the FST® timer will place 5V on these two wires. If you are using a Database® Series Timer, 24 volts will be applied.
3. If you are using a Database® Series timer, remove Jumper JP1. If you are using an FST® Series timer, leave this jumper on.

6.5.2 Connecting the TPI Output

FST®:

1. There are three wires coming from the FST Series Timer. Two are the actuator wires connected to the Signal input. Connect the third wire to one of the Switch terminals. Make sure J6 and J7 are on and J4 and J5 are off.
2. Run a jumper from the black Actuator wire connected to the other Switch screw terminal.

Database®:

There are 4 wires coming from the Database Series Timer. Two are the actuator wires connected to the TPI input. Connect the two other wires to the TPI relay output terminal J1. Make sure J6, J4 and J5 are off and J7 is on.

Contact Closure

If your external timer is simply a relay contact closure, make sure J4, J6 and J5 are on and J7 is off.

Important: J4, J5 and J7 should never be on at the same time!!!

6.5.3 Operation

When a session is started, voltage will be applied to the TPI input. The display on the T-Max® 004 Timer will show the maximum time and count down. When the session ends, the voltage will be removed from the TPI input and bed will turn off. Any remaining session time showing on the T-Max® 004 Timer will be canceled.

***Note*:** The T-Max® 004 Timer cannot be used as a stand alone time in the TPI mode.

If the FST® or Database® Series timers are in delay the T-Max® 004 Timer will show a 0. However, pressing the Start/Stop button on the T-Max® 004 Timer will cancel the remaining delay time and start the session. Pressing the Start/Stop button on the T-Max® 004 Timer will also clear the clean room indication on the FST® and Database® timers.

6.5.4 Cool Down Mode

Cool down mode is the time the bed needs to cool down after a session has ended. The Factory default setting is 3 minutes.

1. Connect the wires that control the fans to the headers on the back of the T-Max® 004 Timer as described in Section 2.1.
2. Set parameter 13 to the desired cool down time as described in section 2.2.

   After a session has ended the display will show a single period in the middle of the display. The period will remain until the cool down time has elapsed. The display will then show a 0.

   Note: If both cool down time and clean room are enabled, the clean room will be displayed. If the clean room indication is cleared before the cool down time has expired, then the cool down indication will be displayed. If the cool down time has elapsed before the clean room indication has been cleared, the clean room indication will remain until it is cleared.

7 Figure B – T-Max® 004 Power Board

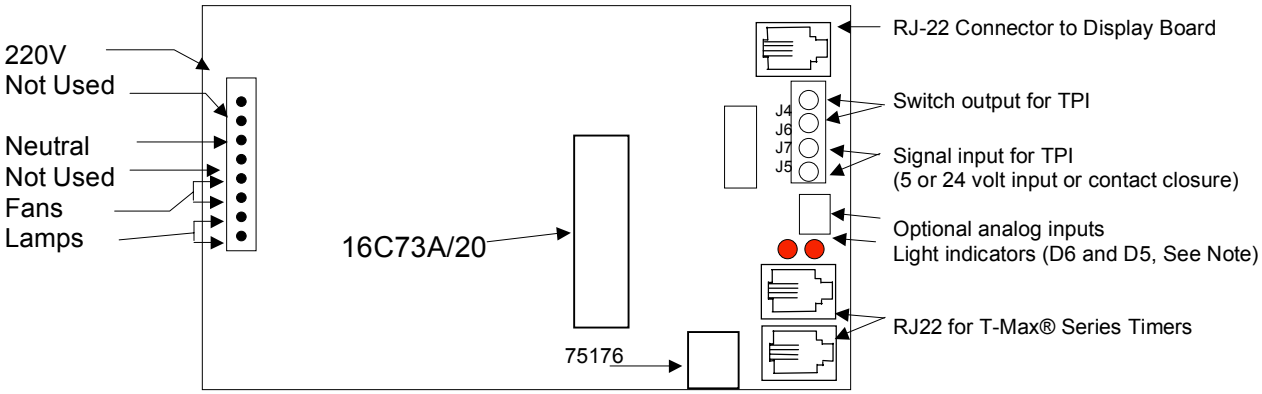

T-Max 004 Power Board

Note: **D6** – Run and communications indication. This light will flash at a once per second rate when operating in standalone mode. It will flash rapidly if communications are active (either with a T-Max® Manager or Master T-Max® 1A or 3A).

The light will stay on solid if the T-Max® 004 is in TPI mode.
D5 – Power On indication.

7.1 Figure C - Connecting the T-Max® 004 Timer to a Remote T-Max® 3A

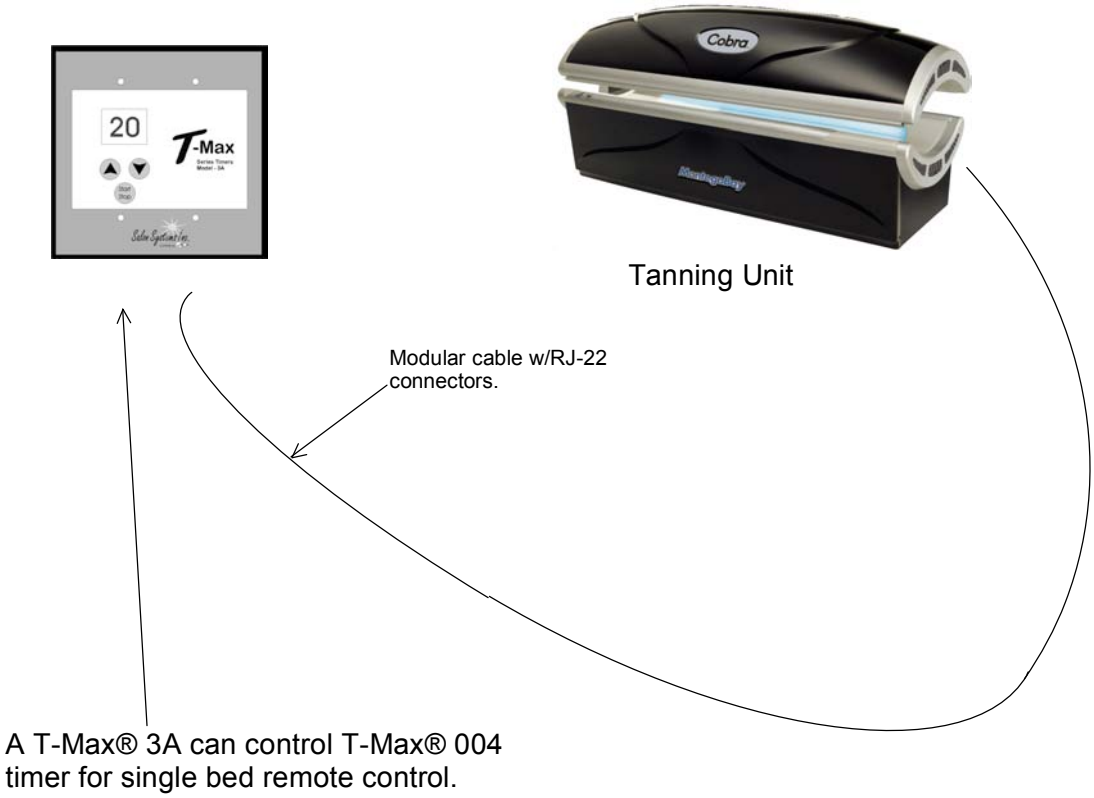

7.2 Figure D - Connecting the T-Max® 004 Timer to A T-Max® Series

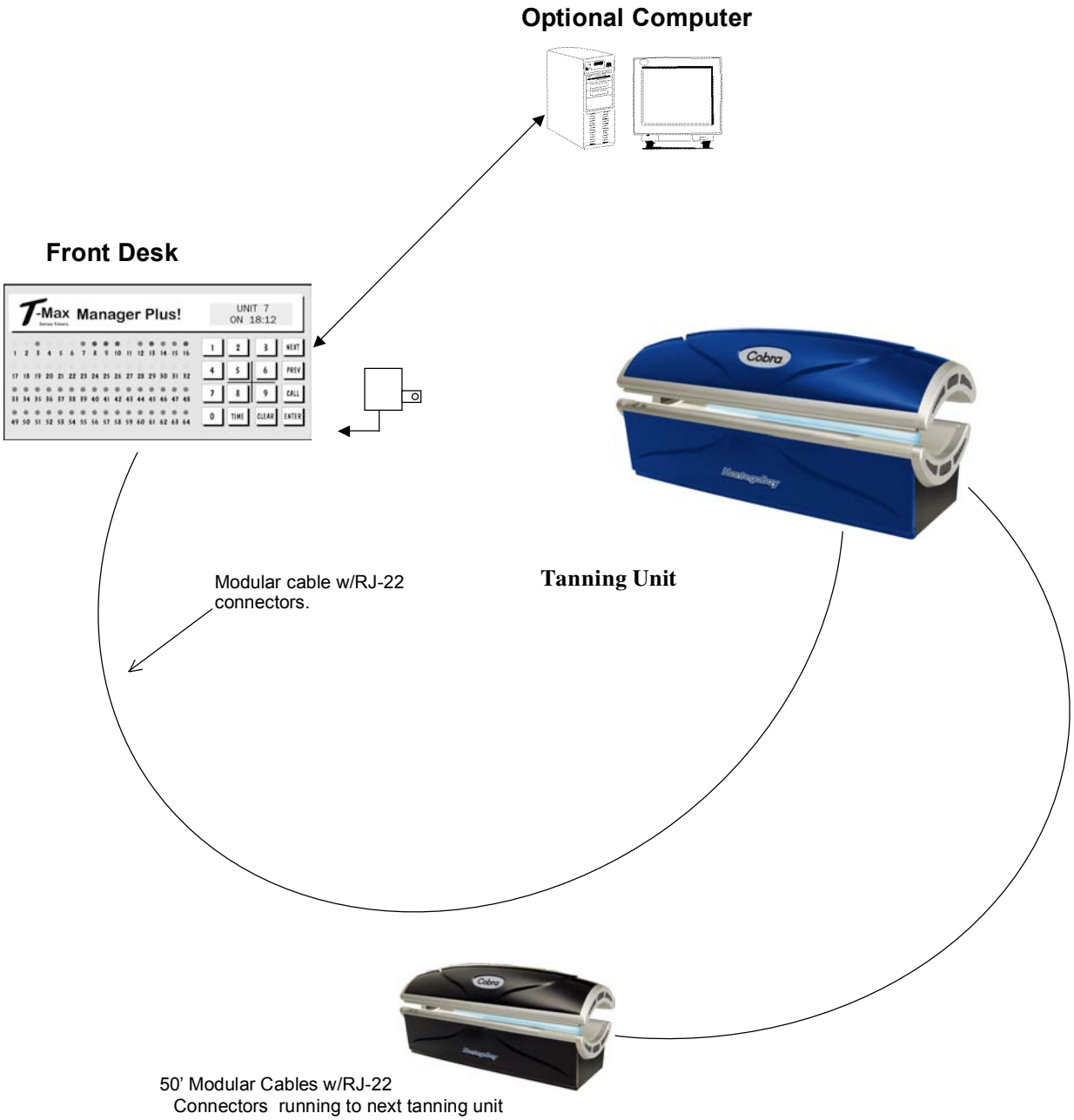

It does not matter in which order the rooms are connected. The only requirement is that there is a continuous connection from the T-Max® Manager through each room to the last room in the T-Max® Series daisy-chain.

Section 4
Maintenance and Repair of the Montego Cobra Series

MAINTENANCE AND REPAIR
ALWAYS DISCONNECT THE UNIT
FROM THE POWER SOURCE.

1. The owner / operator of this unit must make sure the unit is always operated in perfect working condition.
2. This owner/operator is also responsible for regular maintenance and checking of all technical equipment.
3. Only authorized technicians should work on this unit.
4. Avoid all working procedures that may jeopardize the safety of the unit.
5. Always obtain genuine factory authorized replacement parts from PC Marketing or your authorized PC Marketing Distributor.
6. To cool down the unit, fans continue to run for 3 minutes after shut off.

REPLACING ACRYLICS

1. The acrylic sheets are produced and formulated from specially treated acrylic materials highly transparent to UV light.
2. The process of forming and molding the acrylic sheets is done in an environment with carefully controlled temperatures.
3. Finally, the acrylics are annealed, or, oven-baked, for longevity.
4. There can be no deviation from these exacting manufacturing processes.
5. Please be aware all suppliers DO NOT manufacture acrylic sheets in the appropriate manner.
6. To be sure you are receiving genuine factory authorized replacement acrylics, contact PC Marketing or your authorized PC Marketing Distributor.
7. When a replacement acrylic is delivered, it is wrapped in a protective covering on both sides.
8. Before installing in the tanning unit, remove this protective covering.

DO NOT OPERATE THE UNIT WITHOUT THE ACRYLIC SHEET, AS THE COOLING OF THE LAMPS CANNOT BE ASSURED.

ACRYLIC INSTALLATION AND REMOVAL FOR CANOPY

1. Turn the five tooled locks a quarter turn clock wise with a straight screwdriver or a quarter. This will release the acrylic to allow access to swing the hinge acrylic down.
2. Let the acrylic come down about level with the lounge and with two people pull the acrylic towards you firmly but gentle and the acrylic and hinge will come out of the extrusions.
3. Reverse steps for installation.

ACRYLIC INSTALLATION AND REMOVAL FOR LOUNGE

1. Turn the two tooled locks a quarter turn clock wise with a straight screwdriver or a quarter. This will release the front of the acrylic and now the acrylic can be lifted for access.
2. Lift the acrylic to a 45 degree angle and with two people pull the acrylic up and toward you. This will pull the extrusion out of the extrusion and allow you access to the lamps.
3. Reverse steps for installation

RELAMPING INSTRUCTIONS

TURN OFF THE POWER TO THE UNIT BEFORE CHANGING LAMPS.

REPLACEMENT LAMP TYPES

MB Cobra UX, UXF:	Wolff Eternal Sun SX 100w 71" Bi-Pin
	Wolff Eternal Sun UX 160w 71" Bi-Pin
	Heraeus 400w facial lamp
MB Cobra EX, EXF:	Wolff Eternal Sun EX 100w 71" Bi-Pin
	400 W Heraeus facial lamp
MB Cobra SX, SXF:	Wolff Eternal Sun SX 100w 71" Bi-Pin
	Heraeus 400w facial lamp
MB Cobra HX, HXF:	Cosmedico Hi-Tan 100w 71" Bi-Pin
	Heraeus 400 W facial lamp

CAUTION: REPLACE ONLY WITH ORIGINAL LAMPS OR FDA APPROVED EQUIVALENT

2. To obtain replacement tanning lamps, please contact PC Marketing or your authorized PC Marketing distributor for up-to-the-minute, FDA approved lamp compatibility data.
3. No liability can be accepted if replacements other then authorized lamps and starters are installed.
4. In accordance with previous description **,** remove the acrylic sheet,
5. Turn lamp one quarter (1/4) of a turn to align pins with lamp holder, and then disengage the lamp from the stationary lamp holder.
1. Remove lamp.
2. Replace by inserting end of lamp into vertical slots in lamp holder at end of unit.
3. Turn lamp one quarter (1/4) turn to tighten lamp in lamp holder socket.
4. This allows other end of lamp to properly fit into stationary lamp holder.

LIGHTING THE LAMPS

ALWAYS USE EYE PROTECTION WHEN LIGHTING THE LAMPS.

1. Initially, the lamps have slight color differences.
2. This phenomenon disappears after a short time.
3. The lamps shine less brightly at the ends. This is part of the lighting process and is not a defect.

REPLACING THE LAMPS

1. The output of the lamps gradually decreases over time, though this effect cannot be visually detected.
2. To assure optimum tanning performance for your equipment (and, thus, your optimum profitability!), PC Marketing recommends replacing your lamps after approximately 800 hours of operation.
3. Always use eye protection when replacing the lamps

Section 5
General Service Guide

1. The following service information is divided into two sections. Section A contains items which the owner may check without the aid of a service technician.
2. Section B contains items that should only be performed by qualified service technicians. Call PC Marketing or your PC Marketing distributor for questions other than the ones listed in this service guide.
3. *(Note: All units are not the same; therefore some situations may not apply to your unit.)*

A.

KEEPING THINGS RUNNING SMOOTHLY, OR,
WHAT YOU CAN DO WITHOUT A TECHNICIAN.

Situation	Solution
1.Tanning unit does not operate	
a. No power to unit	**a. Check circuit breaker servicing unit.**
b. Timer will not start unit	**b. check timer instructions, p.17**
2. Lamps will not light	
a. Lamps not properly seated	**a. remove, inspect contact ends on lamps, reinstall securely into lamp holders**
b. Faulty lamps	**b. replace, keeping in mind that bad lamps can hinder lighting of adjacent lamps.**
3. Unit is running hot	
a. room too small, or improper space and ventilation	**a. provide sufficient ventilation**
b. incorrect incoming power	**See "B" next page.**
4. Tanning unit is not tanning	
a. Acrylic is dirty	**a. clean both sides of both acrylics**
b. Lamps and reflectors are dirty	**b. remove lamps, wipe with damp cloth, dry. Also clean reflectors. Use alcohol or alcohol-based cleaner only.**
c. Effective lamp life near ending	**c. replace all lamps with new lamps (see lamps list, p. 22)**
d. Effective acrylic life near end.	**d. replace with new acrylics (see parts list, p.25)**
5. Acrylic is fogging up	**a. if caused by dampness, dehumidifier may be needed..**
	b. or, customers might be using improper lotions.
6. My acrylics have cracked. Why?	**a. Check exhaust fan is running and has no obstruction to block air flow.**
	b. Be sure you use quality, heat-tempered replacement acrylics. (see parts list, p.25)

B.

WHEN IT'S TIME TO ASK FOR HELP…

1. All services in the following section are to be performed by a qualified service technician.
2. This section is to aid in isolating and correcting any problems that may occur.
3. This section is not intended for use by the equipment owner.
4. Refer to assembly instructions included in this manual for guidance in disassembling and wiring the tanning unit.
5. DISCONNECT ALL POWER TO THE TANNING UNIT BEFORE SERVICING.
6. Use only factory authorized components for replacement parts. (See parts listing, p. 25)

Situation	Solution
1.*Tanning unit does not operate*	
a. Incorrect incoming power	**a. Check electrical connection against wiring.**
b. Faulty contactor	**c. Replace (see parts listing p.25)**
c. Faulty timer or connections	**d. Check wiring circuit and correct as required.**
2. *Lamps will not light*	
a. Poor wire connection at lamp	**a. Check for loose wire holder**
b. Faulty or defective holder	**b. Replace (see parts listing p.25)**
3*. Tanning running hot*	
a. Incorrect incoming power	**a. Check voltage supply and correct as required**
4. *Tanning unit is not tanning*	
a. Incorrect incoming power	**a. Check voltage supply and correct as required**
5. *Lamps cannot be turned off*.	
a. Faulty Contactor	**a. Replace (see parts listing p.25)**
b. Faulty Timer	**b. Replace (must return defective parts to your distributor) (see parts listing p.25)**

Genuine, Factory-Authorized Montego Bay® Replacement Parts From PC Marketing

Parts Replacement List	
Part	***MB COBRA UX, UXF, EX, EXF, SX, SXF, HX, HXF***
Electrical— 100 Watt ballast 160 watt ballast	20-013 20-015
Electrical—ballast/ facial lamps	20-344
Lamp: Wolff Eternal Sun UX lamp Lamp: Wolff Eternal Sun EX lamp Lamp: Wolff Eternal Sun SX lamp Lamp: Cosmedico Hi-Tan lamp	70-059 70-057 70-056 10198
Facial Lamps: 400 watt Heraeus Lamp	70-001
Reflectors	30-814(canopy w/ facial) 30-815 (canopy no facial) 30-817 (lounge)
Contactor	20-095
Starters	20-017
Timer	20-317
Lamp Holder- (W/O starter) Bi-pin	20-342
Lamp Holder- (W/ Starter) Bi-pin	20-341
Lamp Holder—Facial Lamps	20-349
Acrylics	80-103 (canopy no facial) 80-104 (lounge) 80-107 (canopy W/Facial)
Exterior	60-601 (Canopy Cover Black) 60-602 (Skirt) 60-603 (Dash Panel) 60-605 (Canopy cover Blue) 60-606 (Skirt Blue)
Endcap	60-600
Blue UV Filter Glass (Facial)	80-105
Clear Safety Glass (Facial)	80-106
Timer Touch Pad	20-335

CALL PC Marketing or your authorized PC Marketing Distributor

C. ELECTRICAL SCHEMATICS

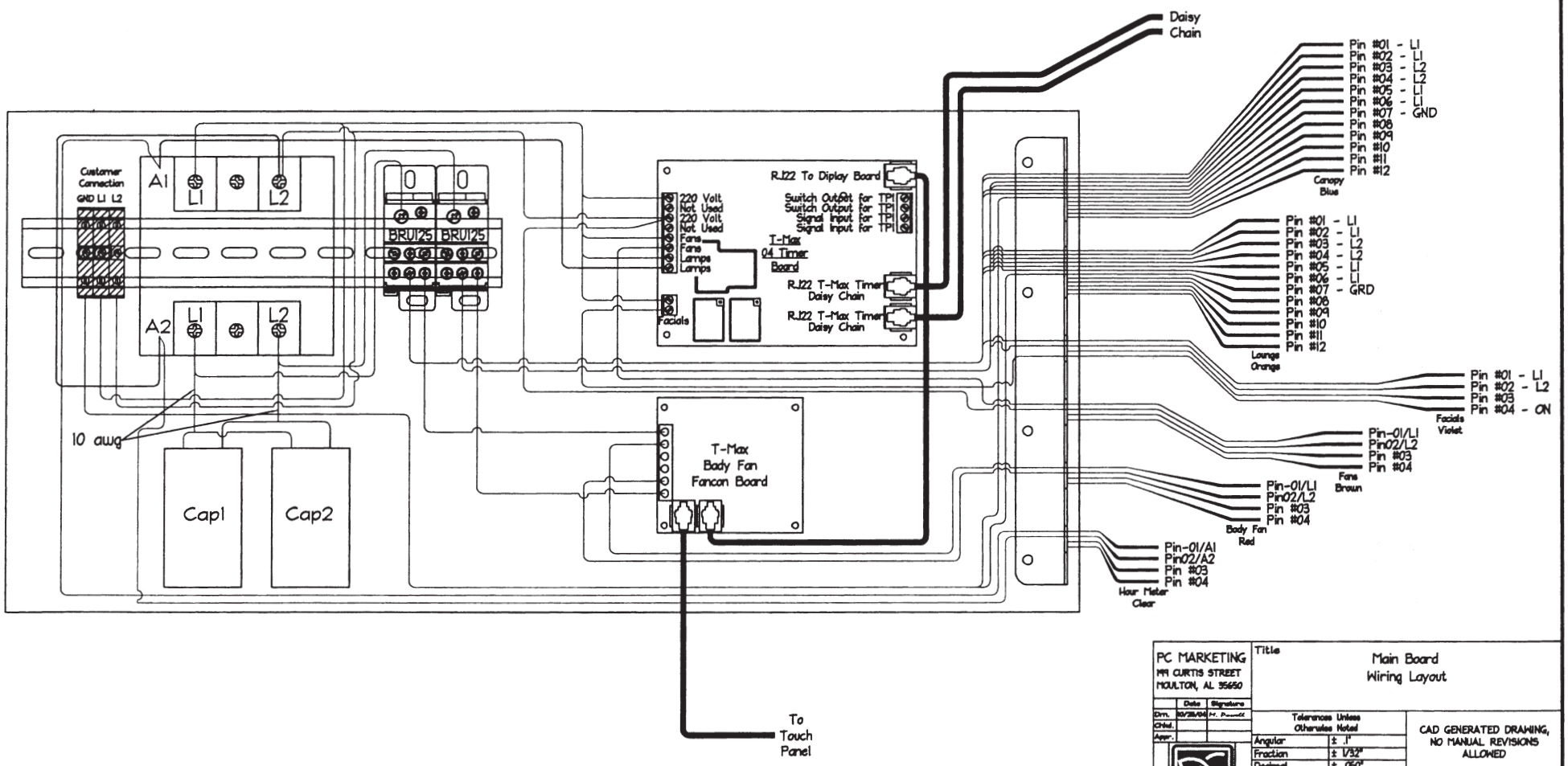

PC MARKETING 199 CURTIS STREET MOULTON, AL 35650		Title: Main Board Wiring Layout	
	Date / Signature		
Drn.	10/28/04 M. Powell		
Chkd.			
Appr.			
		Tolerances Unless Otherwise Noted: Angular ± 1°; Fraction ± 1/32"; Decimal ± .050"	CAD GENERATED DRAWING, NO MANUAL REVISIONS ALLOWED
		Dwg. No. MB*/E0002-04	Rev. 1
		Part # NA; Scale NTS	Sheet 2 of 16

PROPRIETARY NOTICE

THIS DRAWING CONTAINS CONFIDENTIAL AND TRADE SECRET INFORMATION, IS THE PROPERTY OF PC MARKETING, AND IS GIVEN TO THE RECEIVER IN CONFIDENCE. THE RECEIVER BY RECEPTION AND RETENTION OF THE DRAWING ACCEPTS THE DRAWING IN CONFIDENCE AND AGREES THAT, EXCEPT AS AUTHORIZED IN WRITING BY PC MARKETING IT WILL (1) NOT USE THE DRAWING OR ANY COPY THEREOF OR THE CONFIDENTIAL OR TRADE SECRET INFORMATION THEREIN; (2) NOT COPY THE DRAWING; (3) NOT DISCLOSE TO OTHERS EITHER THE DRAWING OR THE CONFIDENTIAL OR TRADE SECRET INFORMATION THEREIN; AND (4) UPON COMPLETION OF THE NEED TO RETAIN THE DRAWING, OR UPON DEMAND, RETURN THE DRAWING, ALL COPIES THEREOF, AND ALL MATERIAL COPIED THEREFROM, TO PC MARKETING.

REV.	DATE	DRN.	DESCRIPTION

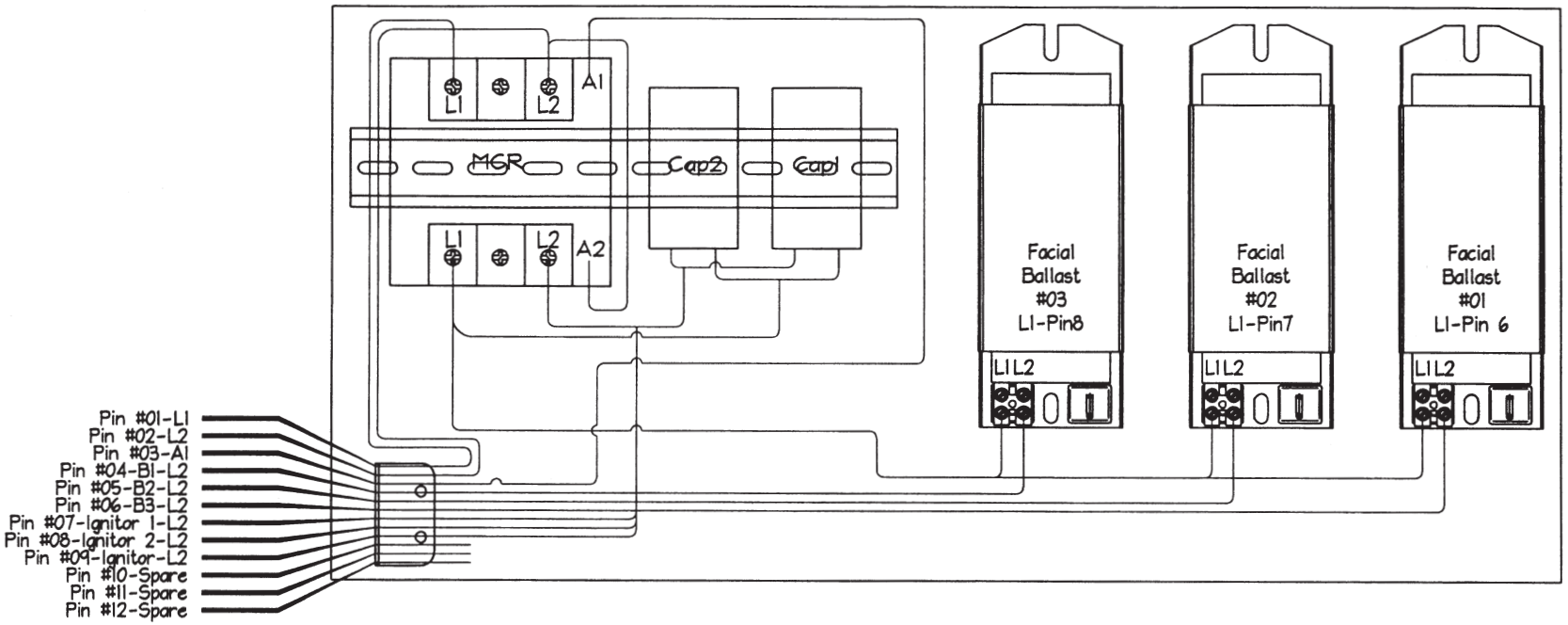

PC MARKETING 199 CURTIS STREET MOULTON, AL 35650	Title: Facial Board Wiring Layout		
Date / Signature Drn. 10/25/04 M. Powell Chkd. Appr.	Tolerances Unless Otherwise Noted Angular ± .1° Fraction ± 1/32" Decimal ± .050"	CAD GENERATED DRAWING, NO MANUAL REVISIONS ALLOWED	
	Dwg. No. MB*/E0004-04		Rev. 1
	Part # NA	Scale NTS	Sheet 4 of 16

PC MARKETING

PROPRIETARY NOTICE

THIS DRAWING CONTAINS CONFIDENTIAL AND TRADE SECRET INFORMATION, IS THE PROPERTY OF PC MARKETING, AND IS GIVEN TO THE RECEIVER IN CONFIDENCE. THE RECEIVER BY RECEPTION AND RETENTION OF THE DRAWING ACCEPTS THE DRAWING IN CONFIDENCE AND AGREES THAT, EXCEPT AS AUTHORIZED IN WRITING BY PC MARKETING IT WILL (1) NOT USE THE DRAWING OR ANY COPY THEREOF OR THE CONFIDENTIAL OR TRADE SECRET INFORMATION THEREIN; (2) NOT COPY THE DRAWING; (3) NOT DISCLOSE TO OTHERS EITHER THE DRAWING OR THE CONFIDENTIAL OR TRADE SECRET INFORMATION THEREIN; AND (4) UPON COMPLETION OF THE NEED TO RETAIN THE DRAWING, OR UPON DEMAND, RETURN THE DRAWING, ALL COPIES THEREOF, AND ALL MATERIAL COPIED THEREFROM, TO PC MARKETING.

REV.	DATE	DRN.	DESCRIPTION

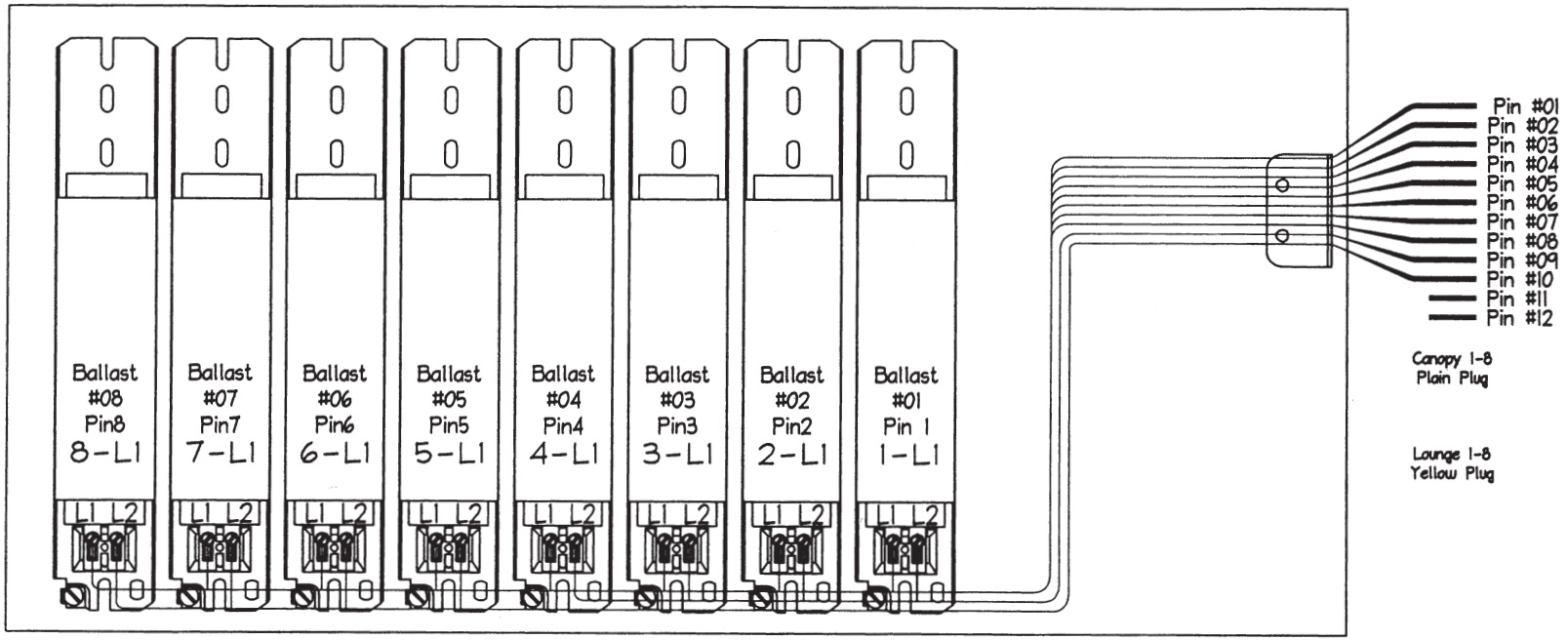

PC MARKETING
MM CURTIS STREET
MOULTON, AL 35650

	Date	Signature
Drn.	10/25/04	M. Powell
Chkd.		
Appr.		

Title: 100 Watt Ballast Tray 1 Thru 8
Canopy and Lounge Wiring Layout

Tolerances Unless Otherwise Noted	
Angular	± 1°
Fraction	± 1/32"
Decimal	± .050"

CAD GENERATED DRAWING, NO MANUAL REVISIONS ALLOWED

Dwg. No. MB#/E0006-04 | Rev. 1

Part # NA | Scale NTS | Sheet 6 of 16

PROPRIETARY NOTICE

THIS DRAWING CONTAINS CONFIDENTIAL AND TRADE SECRET INFORMATION, IS THE PROPERTY OF PC MARKETING, AND IS GIVEN TO THE RECEIVER IN CONFIDENCE. THE RECEIVER BY RECEPTION AND RETENTION OF THE DRAWING ACCEPTS THE DRAWING IN CONFIDENCE AND AGREES THAT, EXCEPT AS AUTHORIZED IN WRITING BY PC MARKETING IT WILL (1) NOT USE THE DRAWING OR ANY COPY THEREOF OR THE CONFIDENTIAL OR TRADE SECRET INFORMATION THEREIN; (2) NOT COPY THE DRAWING; (3) NOT DISCLOSE TO OTHERS EITHER THE DRAWING OR THE CONFIDENTIAL OR TRADE SECRET INFORMATION THEREIN; AND (4) UPON COMPLETION OF THE NEED TO RETAIN THE DRAWING, OR UPON DEMAND, RETURN THE DRAWING, ALL COPIES THEREOF, AND ALL MATERIAL COPIED THEREFROM, TO PC MARKETING.

REV.	DATE	DRN.	DESCRIPTION

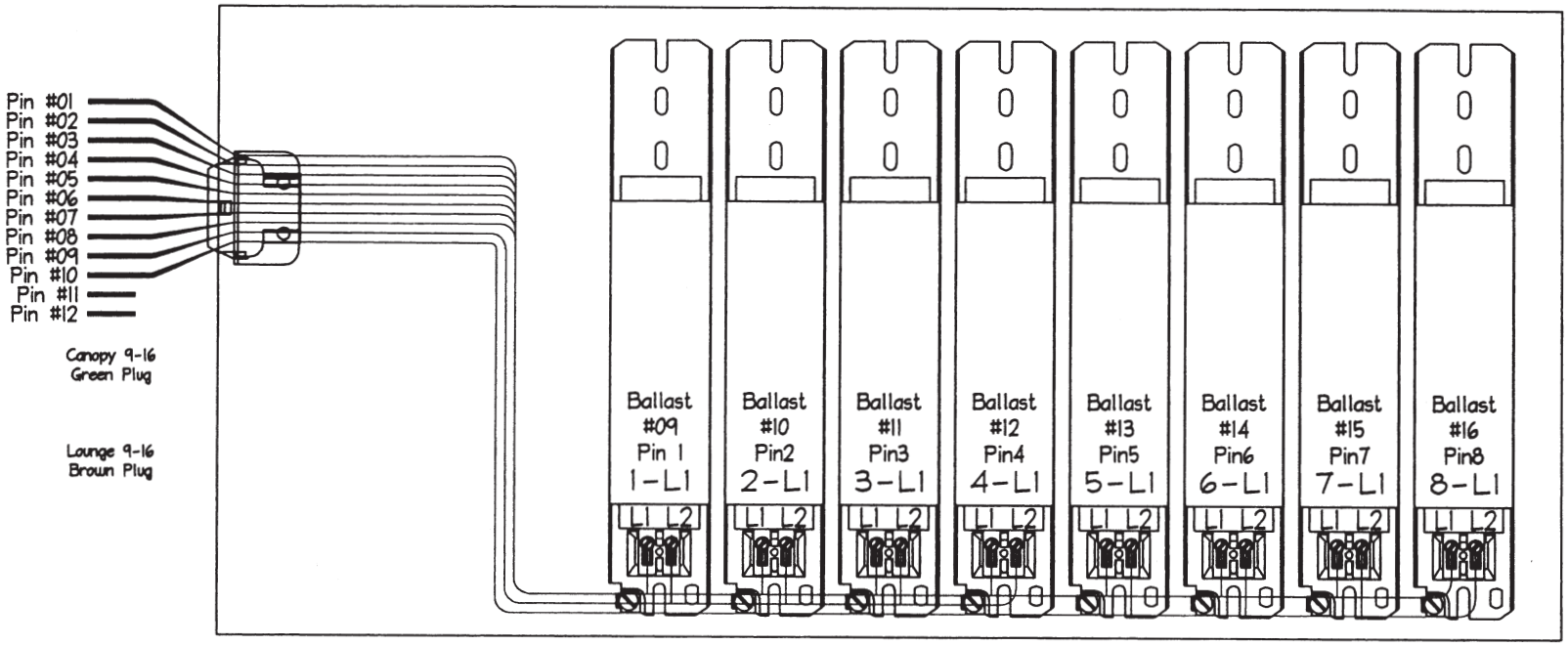

PC MARKETING 199 CURTIS STREET MOULTON, AL 35650		Title: 100 Watt Ballast Tray 9 Thru 16 Canopy and Lounge Wiring Layout	
	Date / Signature		
Drn.	10/28/98 M. Powell		
Chkd.			
Appr.			
		Tolerances Unless Otherwise Noted: Angular ± .1° Fraction ± 1/32" Decimal ± .050"	CAD GENERATED DRAWING, NO MANUAL REVISIONS ALLOWED
		Dwg. No. MB#/E0008-04	Rev. 1
		Part # NA	Scale NTS
			Sheet 6 of 16

PROPRIETARY NOTICE

THIS DRAWING CONTAINS CONFIDENTIAL AND TRADE SECRET INFORMATION, IS THE PROPERTY OF PC MARKETING, AND IS GIVEN TO THE RECEIVER IN CONFIDENCE. THE RECEIVER BY RECEPTION AND RETENTION OF THE DRAWING ACCEPTS THE DRAWING IN CONFIDENCE AND AGREES THAT, EXCEPT AS AUTHORIZED IN WRITING BY PC MARKETING IT WILL (1) NOT USE THE DRAWING OR ANY COPY THEREOF OR THE CONFIDENTIAL OR TRADE SECRET INFORMATION THEREIN; (2) NOT COPY THE DRAWING; (3) NOT DISCLOSE TO OTHERS EITHER THE DRAWING OR THE CONFIDENTIAL OR TRADE SECRET INFORMATION THEREIN; AND (4) UPON COMPLETION OF THE NEED TO RETAIN THE DRAWING, OR UPON DEMAND, RETURN THE DRAWING, ALL COPIES THEREOF, AND ALL MATERIAL COPIED THEREFROM, TO PC MARKETING.

REV.	DATE	DRN.	DESCRIPTION

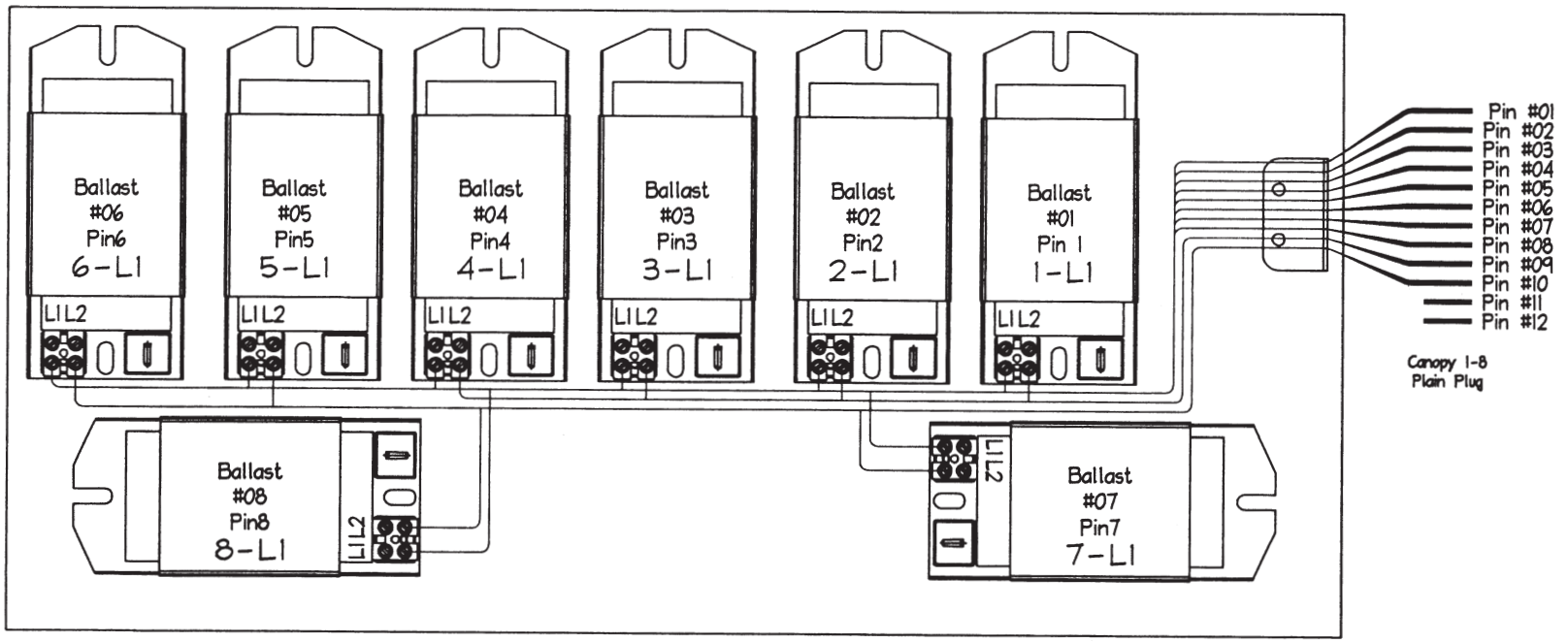

PC MARKETING 99 CURTIS STREET MOULTON, AL 35650		Title: 160 Watt Ballast Tray 1Thru 8 Canopy Wiring Layout	
	Date	Signature	
Drn.	10/25/04	M. Powell	
Chkd.			
Appr.			
Tolerances Unless Otherwise Noted		CAD GENERATED DRAWING, NO MANUAL REVISIONS ALLOWED	
Angular	± 1°		
Fraction	± 1/32"		
Decimal	± .050"		
Dwg. No. MB#/E0010-04			Rev. 1
Part # NA		Scale NTS	Sheet 10 of 16

PROPRIETARY NOTICE

THIS DRAWING CONTAINS CONFIDENTIAL AND TRADE SECRET INFORMATION, IS THE PROPERTY OF PC MARKETING, AND IS GIVEN TO THE RECEIVER IN CONFIDENCE. THE RECEIVER BY RECEPTION AND RETENTION OF THE DRAWING ACCEPTS THE DRAWING IN CONFIDENCE AND AGREES THAT, EXCEPT AS AUTHORIZED IN WRITING BY PC MARKETING IT WILL (1) NOT USE THE DRAWING OR ANY COPY THEREOF OR THE CONFIDENTIAL OR TRADE SECRET INFORMATION THEREIN; (2) NOT COPY THE DRAWING; (3) NOT DISCLOSE TO OTHERS EITHER THE DRAWING OR THE CONFIDENTIAL OR TRADE SECRET INFORMATION THEREIN; AND (4) UPON COMPLETION OF THE NEED TO RETAIN THE DRAWING, OR UPON DEMAND, RETURN THE DRAWING, ALL COPIES THEREOF, AND ALL MATERIAL COPIED THEREFROM, TO PC MARKETING.

REV.	DATE	DRN.	DESCRIPTION

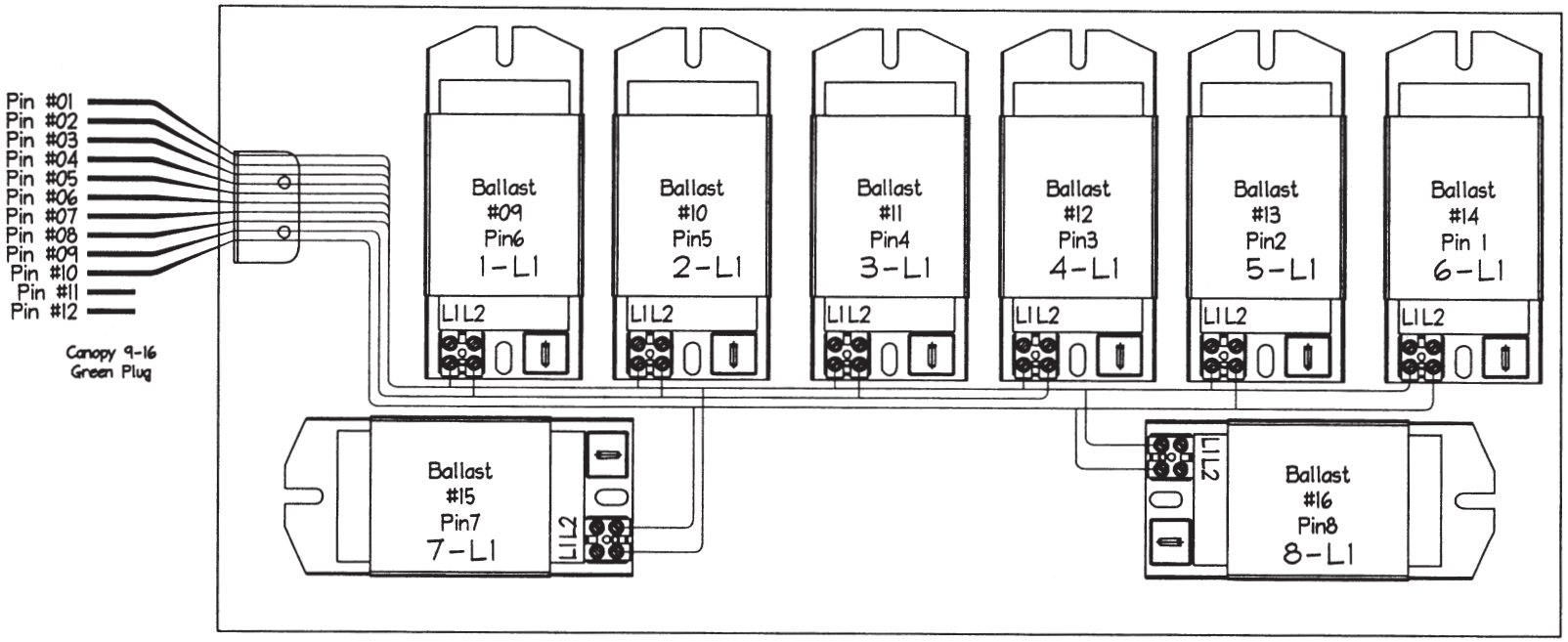

PC MARKETING MM CURTIS STREET MOULTON, AL 35650	Title: 160 Watt Ballast Tray 9Thru 16 Canopy Wiring Layout
Drn. 10/25/06 M. Powell Chkd. Appr.	Tolerances Unless Otherwise Noted Angular ± .1° Fraction ± 1/32" Decimal ± .050"
	CAD GENERATED DRAWING, NO MANUAL REVISIONS ALLOWED
	Dwg. No. MB#/E0012-04 — Rev. 1
	Part # NA — Scale NTS — Sheet 12 of 16

PROPRIETARY NOTICE

THIS DRAWING CONTAINS CONFIDENTIAL AND TRADE SECRET INFORMATION, IS THE PROPERTY OF PC MARKETING, AND IS GIVEN TO THE RECEIVER IN CONFIDENCE. THE RECEIVER BY RECEPTION AND RETENTION OF THE DRAWING ACCEPTS THE DRAWING IN CONFIDENCE AND AGREES THAT, EXCEPT AS AUTHORIZED IN WRITING BY PC MARKETING IT WILL (1) NOT USE THE DRAWING OR ANY COPY THEREOF OR THE CONFIDENTIAL OR TRADE SECRET INFORMATION THEREIN; (2) NOT COPY THE DRAWING; (3) NOT DISCLOSE TO OTHERS EITHER THE DRAWING OR THE CONFIDENTIAL OR TRADE SECRET INFORMATION THEREIN; AND (4) UPON COMPLETION OF THE NEED TO RETAIN THE DRAWING, OR UPON DEMAND, RETURN THE DRAWING, ALL COPIES THEREOF, AND ALL MATERIAL COPIED THEREFROM, TO PC MARKETING.

REV.	DATE	DRN.	DESCRIPTION

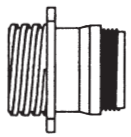

37 Pin Amp
Recepticale

Cut Spare 60"
Cut 48"
Cut 48"
Cut 48"
Cut 48"
Cut 60"

SPARE 11/20/21/22/23/24/25/26/35/36

WIRE # - 1 TO PIN 1 Canopy BOARD 1-8
WIRE # - 2 TO PIN 2 Canopy BOARD 1-8
WIRE # - 3 TO PIN 3 Canopy BOARD 1-8
WIRE # - 4 TO PIN 4 Canopy BOARD 1-8
WIRE # - 5 TO PIN 5 Canopy BOARD 1-8
WIRE # - 6 TO PIN 6 Canopy BOARD 1-8
WIRE # - 7 TO PIN 7 Canopy BOARD 1-8
WIRE # - 8 TO PIN 8 Canopy BOARD 1-8
WIRE BLUE PIN 9 Canopy BOARD 1-8
WIRE BLUE PIN 10 Canopy BOARD 1-8

STEP 1 All Female Pins
(Plain) 12 Connector Plug

Cut 44"

WIRE # - 12 TO PIN 1 Canopy BOARD 9-16
WIRE # - 13 TO PIN 2 Canopy BOARD 9-16
WIRE # - 14 TO PIN 3 Canopy BOARD 9-16
WIRE # - 15 TO PIN 4 Canopy BOARD 9-16
WIRE # - 16 TO PIN 5 Canopy BOARD 9-16
WIRE # - 17 TO PIN 6 Canopy BOARD 9-16
WIRE # - 18 TO PIN 7 Canopy BOARD 9-16
WIRE # - 19 TO PIN 8 Canopy BOARD 9-16
WIRE BLUE PIN 9 Canopy BOARD 1-8
WIRE BLUE PIN 10 Canopy BOARD 1-8

STEP 2 All Female Pins
(Green) 12 Connector Plug

WIRE # - 33 L1
WIRE # - 34 L2

STEP 3 Male Spade Pins (Part # 20-052)
Canopy Fan

BLUE TO PIN 1 MOTHER BOARD LOUNGE
BLUE TO PIN 2 MOTHER BOARD LOUNGE
WIRE # - 9 TO PIN 3 MOTHER BOARD LOUNGE
WIRE # - 10 TO PIN 4 MOTHER BOARD LOUNGE
BLUE TO PIN 5 MOTHER BOARD LOUNGE
BLUE TO PIN 6 MOTHER BOARD LOUNGE
WIRE # - 37 TO PIN 7 MOTHER BOARD

STEP 6 All Female Pins
(Blue) 12 Connector Plug

Cut 12"

BLUE TO PIN 1 FACIAL JUMPER
BLUE TO PIN 2 FACIALJUMPER
BLACK TO PIN 3
WIRE # - 27 TO PIN 4 FACIAL BOARD
WIRE # - 28 TO PIN 5 FACIAL BOARD
WIRE # - 29 TO PIN 6 FACIAL BOARD
WIRE # - 30 TO PIN 7 FACIAL BOARD
WIRE # - 31 TO PIN 8 FACIAL BOARD
WIRE # - 32 TO PIN 9 FACIAL BOARD

STEP 4 All Female Pins
(White) 12 Connector Plug

BLUE TO PIN 1 MOTHER BOARD
BLUE TO PIN 2 MOTHER BOARD
BLACK TO PIN 4 MOTHER BOARD

STEP 5 All Female Pins
(Violet) 4 Connector Plug

PC MARKETING
999 CURTIS STREET
MOULTON, AL 35650

Title: Main Cable Wiring Layout

	Date	Signature
Drn.	10/28/04	M. Powell
Chkd.		
Appr.		

Tolerances Unless Otherwise Noted

Angular	± 1°
Fraction	± 1/32"
Decimal	± .050"

CAD GENERATED DRAWING, NO MANUAL REVISIONS ALLOWED

Dwg. No. MB#/E0013-04 | Rev. 1

Part # NA | Scale NTS | Sheet 13 of 16

PROPRIETARY NOTICE

THIS DRAWING CONTAINS CONFIDENTIAL AND TRADE SECRET INFORMATION, IS THE PROPERTY OF PC MARKETING, AND IS GIVEN TO THE RECEIVER IN CONFIDENCE. THE RECEIVER BY RECEPTION AND RETENTION OF THE DRAWING ACCEPTS THE DRAWING IN CONFIDENCE AND AGREES THAT, EXCEPT AS AUTHORIZED IN WRITING BY PC MARKETING IT WILL (1) NOT USE THE DRAWING OR ANY COPY THEREOF OR THE CONFIDENTIAL OR TRADE SECRET INFORMATION THEREIN, (2) NOT COPY THE DRAWING, (3) NOT DISCLOSE TO OTHERS EITHER THE DRAWING OR THE CONFIDENTIAL OR TRADE SECRET INFORMATION THEREIN, AND (4) UPON COMPLETION OF THE NEED TO RETAIN THE DRAWING, OR UPON DEMAND, RETURN THE DRAWING, ALL COPIES THEREOF, AND ALL MATERIAL COPIED THEREFROM, TO PC MARKETING.

REV.	DATE	DRN.	DESCRIPTION

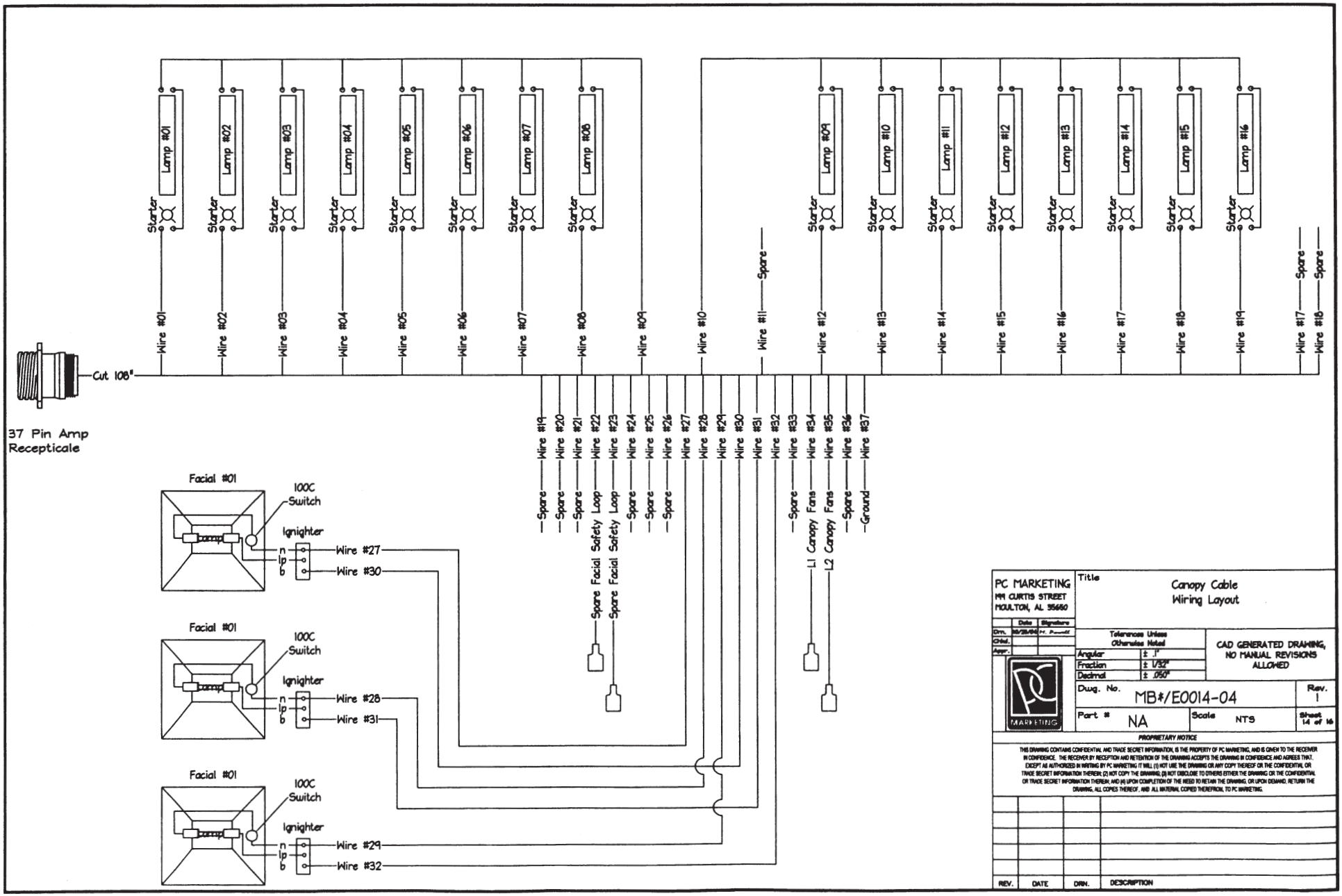

PC MARKETING	Title: Canopy Cable Wiring Layout
199 CURTIS STREET MOULTON, AL 35650	
Drn. 10/25/04 H. Powell	Tolerances Unless Otherwise Noted
Chkd.	Angular ± 1°
Appr.	Fraction ± 1/32"
	Decimal ± .050"
CAD GENERATED DRAWING, NO MANUAL REVISIONS ALLOWED	
Dwg. No. MB#/E0014-04	Rev. 1
Part # NA	Scale NTS
	Sheet 14 of 16

PROPRIETARY NOTICE

THIS DRAWING CONTAINS CONFIDENTIAL AND TRADE SECRET INFORMATION, IS THE PROPERTY OF PC MARKETING, AND IS GIVEN TO THE RECEIVER IN CONFIDENCE. THE RECEIVER BY RECEPTION AND RETENTION OF THE DRAWING ACCEPTS THE DRAWING IN CONFIDENCE AND AGREES THAT, EXCEPT AS AUTHORIZED IN WRITING BY PC MARKETING IT WILL (1) NOT USE THE DRAWING OR ANY COPY THEREOF OR THE CONFIDENTIAL OR TRADE SECRET INFORMATION THEREIN; (2) NOT COPY THE DRAWING; (3) NOT DISCLOSE TO OTHERS EITHER THE DRAWING OR THE CONFIDENTIAL OR TRADE SECRET INFORMATION THEREIN; AND (4) UPON COMPLETION OF THE NEED TO RETAIN THE DRAWING, OR UPON DEMAND, RETURN THE DRAWING, ALL COPIES THEREOF, AND ALL MATERIAL COPIED THEREFROM, TO PC MARKETING.

REV.	DATE	DRN.	DESCRIPTION

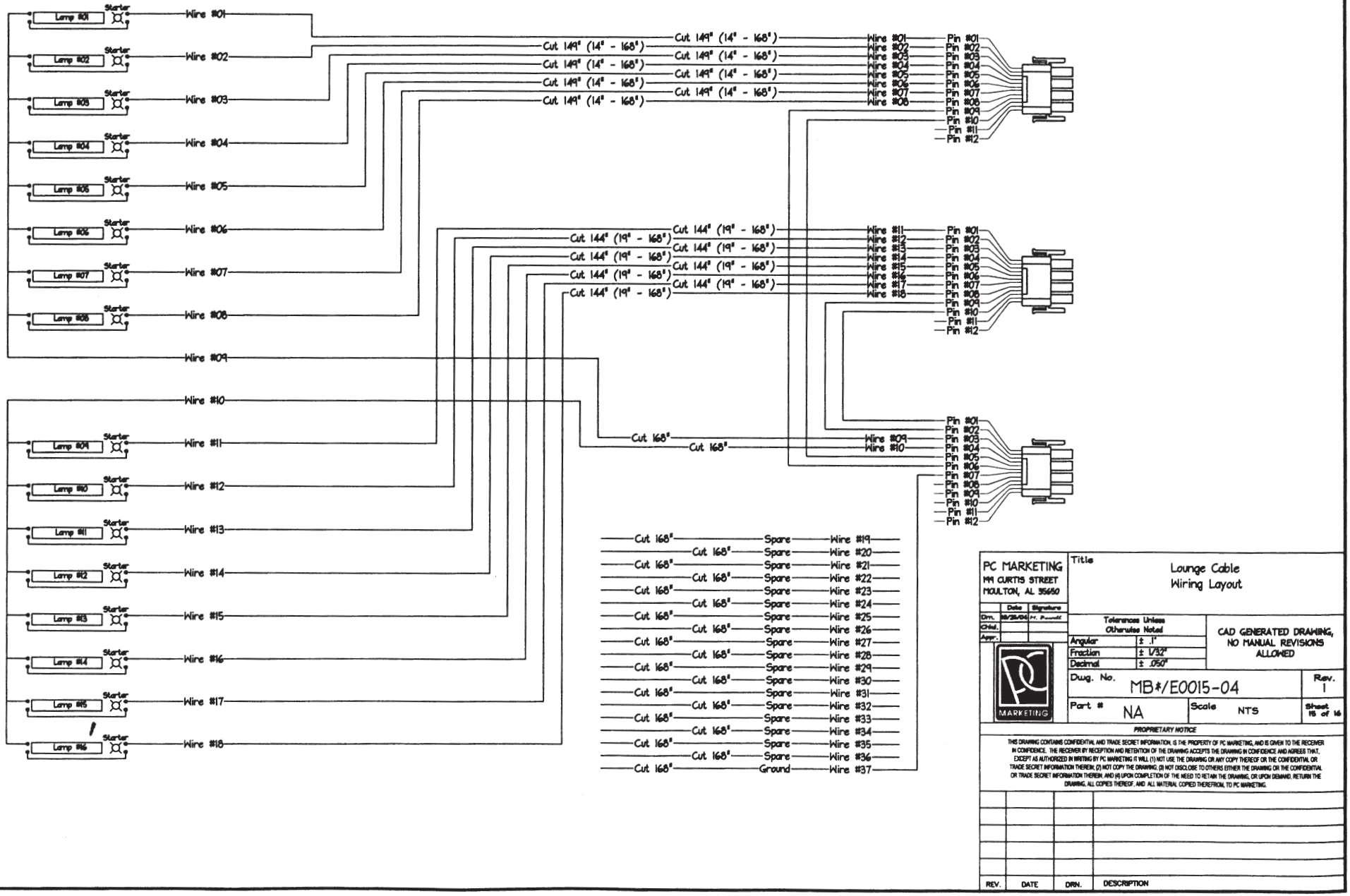

PC MARKETING
99 CURTIS STREET
MOULTON, AL 35650

	Date	Signature
Drn.	08/28/06	M. Powell
Chkd.		
Appr.		

Title: Lounge Cable Wiring Layout

Tolerances Unless Otherwise Noted	
Angular	± .1°
Fraction	± 1/32"
Decimal	± .050"

CAD GENERATED DRAWING, NO MANUAL REVISIONS ALLOWED

Dwg. No. MB*/E0015-04 | Rev. 1

Part # NA | Scale NTS | Sheet 15 of 16

PROPRIETARY NOTICE

THIS DRAWING CONTAINS CONFIDENTIAL AND TRADE SECRET INFORMATION. IS THE PROPERTY OF PC MARKETING, AND IS GIVEN TO THE RECEIVER IN CONFIDENCE. THE RECEIVER BY RECEPTION AND RETENTION OF THE DRAWING ACCEPTS THE DRAWING IN CONFIDENCE AND AGREES THAT, EXCEPT AS AUTHORIZED IN WRITING BY PC MARKETING IT WILL (1) NOT USE THE DRAWING OR ANY COPY THEREOF OR THE CONFIDENTIAL OR TRADE SECRET INFORMATION THEREIN, (2) NOT COPY THE DRAWING, (3) NOT DISCLOSE TO OTHERS EITHER THE DRAWING OR THE CONFIDENTIAL OR TRADE SECRET INFORMATION THEREIN, AND (4) UPON COMPLETION OF THE NEED TO RETAIN THE DRAWING, OR UPON DEMAND, RETURN THE DRAWING, ALL COPIES THEREOF, AND ALL MATERIAL COPIED THEREFROM, TO PC MARKETING.

REV.	DATE	DRN.	DESCRIPTION

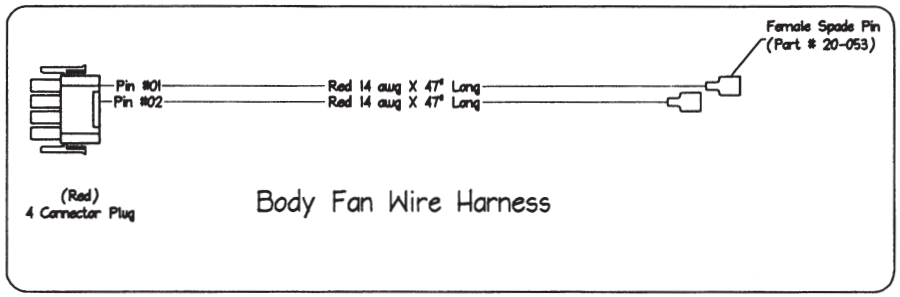

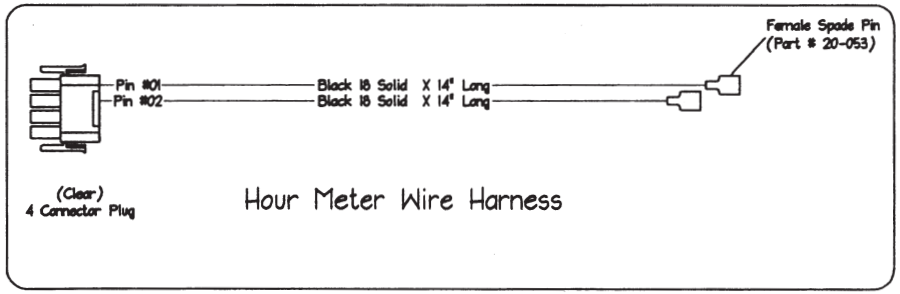

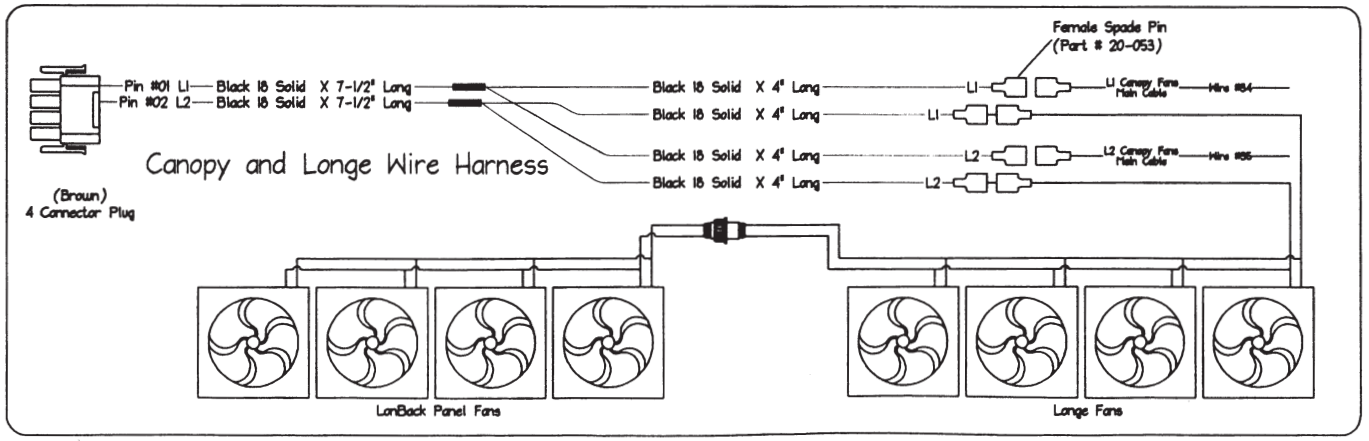

PC MARKETING 199 CURTIS STREET MOULTON, AL 35650	Title	Miscellaneous Cable Wiring Layout
Date / Signature Drn. 10/28/04 H. Powell Chkd. Appr.	Tolerances Unless Otherwise Noted Angular ± .1° Fraction ± 1/32" Decimal ± .050"	CAD GENERATED DRAWING, NO MANUAL REVISIONS ALLOWED
	Dwg. No. MB#/E0016-04	Rev. 1
	Part # NA / Scale NTS	Sheet 16 of 16

PROPRIETARY NOTICE

THIS DRAWING CONTAINS CONFIDENTIAL AND TRADE SECRET INFORMATION, IS THE PROPERTY OF PC MARKETING, AND IS GIVEN TO THE RECEIVER IN CONFIDENCE. THE RECEIVER BY RECEPTION AND RETENTION OF THE DRAWING ACCEPTS THE DRAWING IN CONFIDENCE AND AGREES THAT, EXCEPT AS AUTHORIZED IN WRITING BY PC MARKETING IT WILL (1) NOT USE THE DRAWING OR ANY COPY THEREOF OR THE CONFIDENTIAL OR TRADE SECRET INFORMATION THEREIN; (2) NOT COPY THE DRAWING; (3) NOT DISCLOSE TO OTHERS EITHER THE DRAWING OR THE CONFIDENTIAL OR TRADE SECRET INFORMATION THEREIN; AND (4) UPON COMPLETION OF THE NEED TO RETAIN THE DRAWING, OR UPON DEMAND, RETURN THE DRAWING, ALL COPIES THEREOF, AND ALL MATERIAL COPIED THEREFROM, TO PC MARKETING.

REV.	DATE	DRN.	DESCRIPTION